JAGUAR Service	TECHNICAL BULLETIN	S419-10
		01/2002

Subject

LOSS OF TELEPHONE SIGNAL DURING CALL (GSM MARKETS ONLY)

Model: S-TYPE

Year: 1999 to 2002 **VIN L00001 to M44997**

Section: 419 **Electronic Feature Group**

Sub-Section: 419-08 **Cellular Phone**

Summary
S419-10: This Technical Bulletin has been issued due to customer complaints of losing the telephone signal when changing from a telephone standby condition to a telephone call status. This may be caused due to a voltage drop to the telephone Hang-Up Cup (HUC).

Action

To eliminate losing the telephone signal when changing from a telephone standby condition to a telephone call status, a capacitor is to be installed in the HUC electrical harness to eliminate a voltage drop.

On a customer complaint basis only, follow the workshop procedure outlined below.

Workshop Procedure

1 Remove telephone hang-up cup (see Workshop Manual, JTIS CD ROM section: 419-08).
2 Unlatch anti back-out device from HUC electrical harness connector.
3 Displace and disconnect terminals 2 (black) and 10 (red) from electrical harness connector. (See Fig. 1)

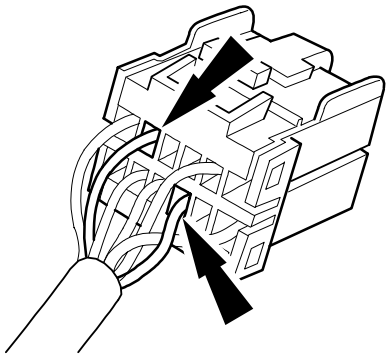

Fig. 1

4 Cut and remove approximately 15mm of heat shrink tubing from HUC electrical harness for access. (See Fig. 2)

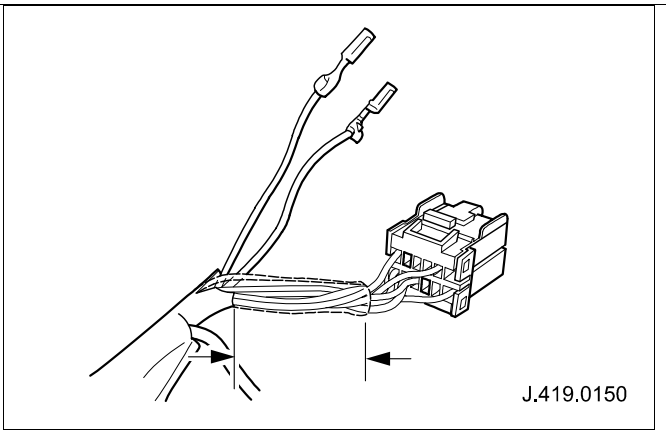

Fig. 2

5 Carefully, so as not to damage wire strands, cut through insulation of disconnected electrical cables.

Note: A suitable sharp craft knife will aid previous step.

6 Cut approximately 30mm from rear of electrical terminal. (See Fig. 3)

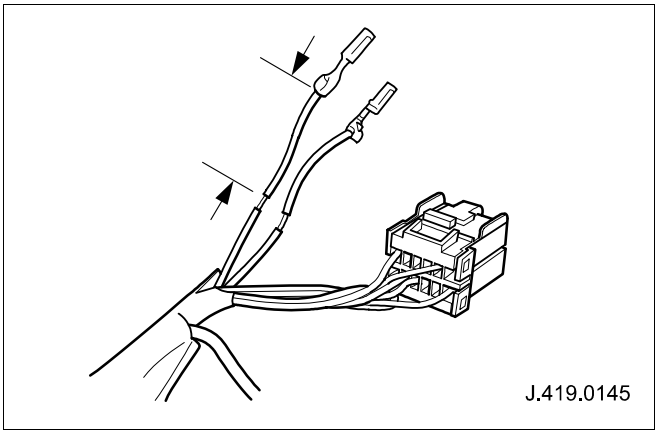

Fig. 3

7 Pull back cut insulation of disconnected electrical cables to expose approximately 3 to 4mm of wire strands.

8 Place new capacitor (XR8 36435) along side electrical harness with capacitor legs pointing towards electrical harness connector.

Note: Capacitor short leg (Negative) capacitor long leg (positive). (See Fig. 4)

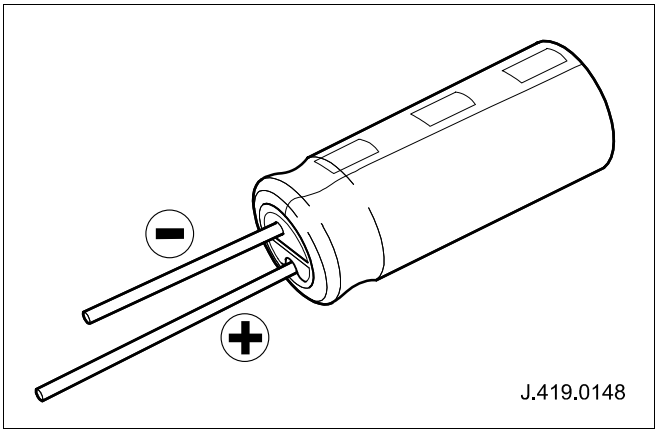

Fig. 4

9 Spiral wrap exposed electrical wire of black cable one turn around end of capacitor short leg (negative) and exposed electrical wire of red cable one turn around end of capacitor long leg (positive). (See Fig 5)

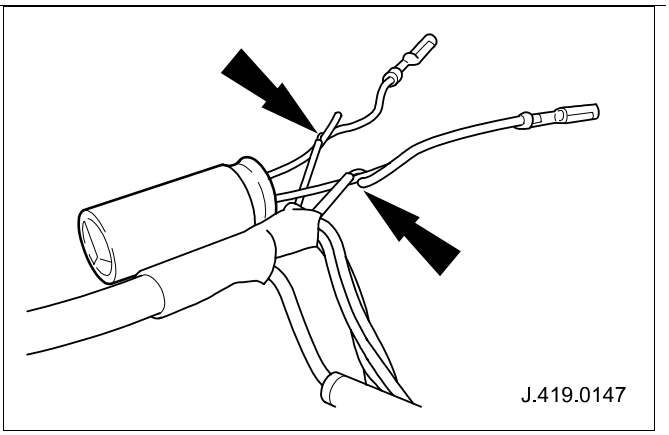

Fig. 5

10 Solder capacitor short and long legs to electrical cable exposed wires using fine bit soldering iron.
11 Place heat shrink tube (418-104) from electrical harness repair kit to front.
12 Cut heat shrink tube in half (each half to be approximately 25mm long).
13 Install heat shrink tubes to black and red electrical cables to cover soldered joints and capacitor legs. (See Fig. 6)

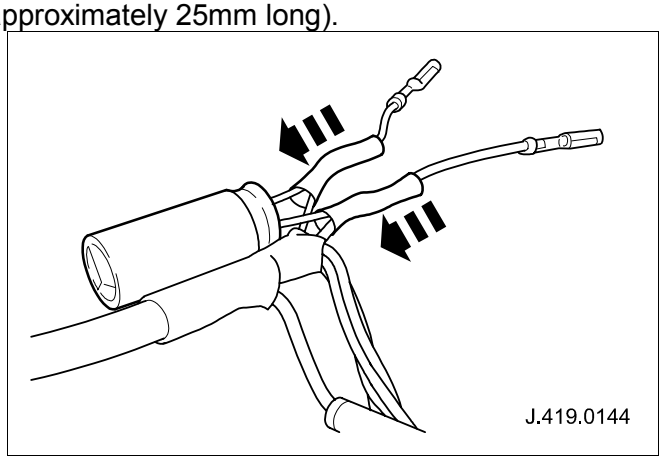

Fig. 6

14 Using suitable heat source, shrink tubes onto electrical cables/capacitor.
15 Install electrical terminals 2 (black) and 10 (red) to HUC electrical harness connector.
16 Install HUC electrical harness connector anti back-out device.
17 Using suitable tape, secure capacitor body/heat shrink tubes to HUC electrical harness. (See Fig. 7)

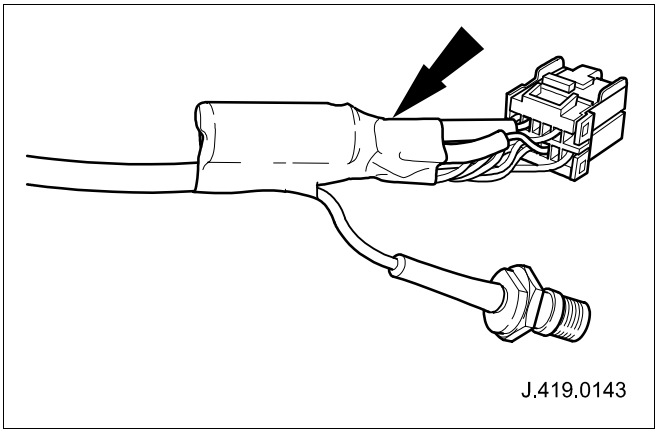

Fig. 7

18 Install telephone hang-up cup (see Workshop Manual, JTIS CD ROM section: 419-08).

Parts Information

The following parts must be ordered via Jaguar Cars Parts Operations.

Description	Part Number	Quantity
Capacitor	XR8 36435	1

Warranty Information

Description	SRO	Labor Time Allowance	Warranty Code
Install capacitor	86 92 98	0.6 Hours	PC-BG-42